## Technical details

| | |
|---|---|
| Sash preparation | The pane is mounted in the sash and fixed using glazing strips; sash is **already fitted** into the frame |
| Window exterior, max. | 3.000 mm x 2.800 mm |
| Window exterior, min. | 400 mm x 400 mm |
| Profile height, max. | 125 mm |

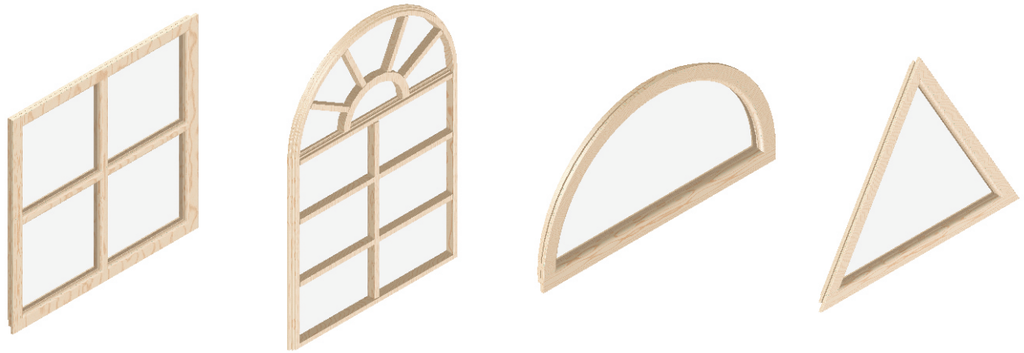

## The all-round service from LEMUTH - guarantees security for your investment.

**You will receive the following services from a single source and harmonised down to the last detail:**

- Project management
- System planning
- Factory planning
- Construction
- Electrical project managment
- Component production
- Installation
- Start-up
- Staff training
- Documentation
- Project management

**And included in the software field:**

- PLC programming of the system control
- Programming of the industrial PC interfaces
- Network connection to the company network
- Networking the window construction system

LEMUTH GmbH • D-98617 Meiningen • Gleimershäuser Strasse 14
Fon +49 (0) 3693 9412-0 • Fax +49 (0) 3693 9412-50 • E-Mail: info@LEMUTH.com

www.LEMUTH.com

998_294 Prospekt VSA119S_englisch_2014 - Technische Änderungen vorbehalten

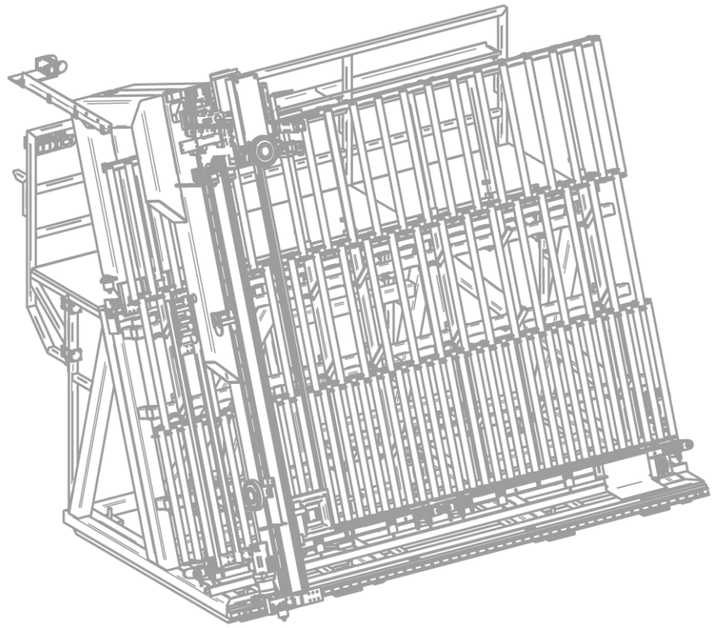

**For frames of:** ✓ PVC ✓ Wood ✓ Aluminum

# VSA119

## Silicone application automat

# VSA119

## Silicone application automat

The ***VSA119*** silicone application machine was designed to allow a clean and efficient sealing of the glazing unit using a silicone sealant. The glass pane can be sealed in window frames made of PVC, wood or aluminium.

### Sealing of different window geometrics

The machines makes it possible to process windows with any number of panes. **Right-angled windows** as well as **acute-angled windows**, **round arch windows** and **other geometrics** can be sealed in one machine, if data for the sealing of window elements is present.
For this a form of window identification is required (via barcode or „Tec“ for example), as well as the allocation of the required geometric data via the window construction programme. Optionally, if there is no data available, you can choose from different window types on the monitor.
If processing data is not present, the units must be measured and the glass pane must be sealed without data. Here however, only right-angled units can be sealed.

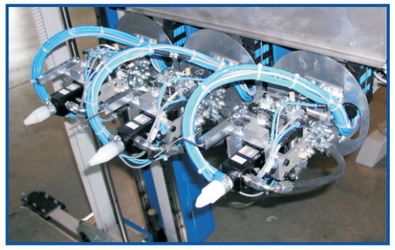

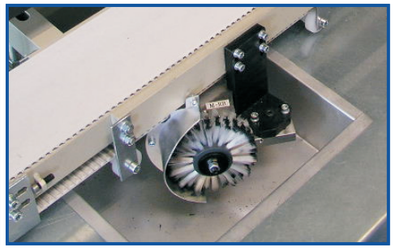

An automatic cleaning unit for the cleaning of the nozzles after every sealing is integrated as standard.

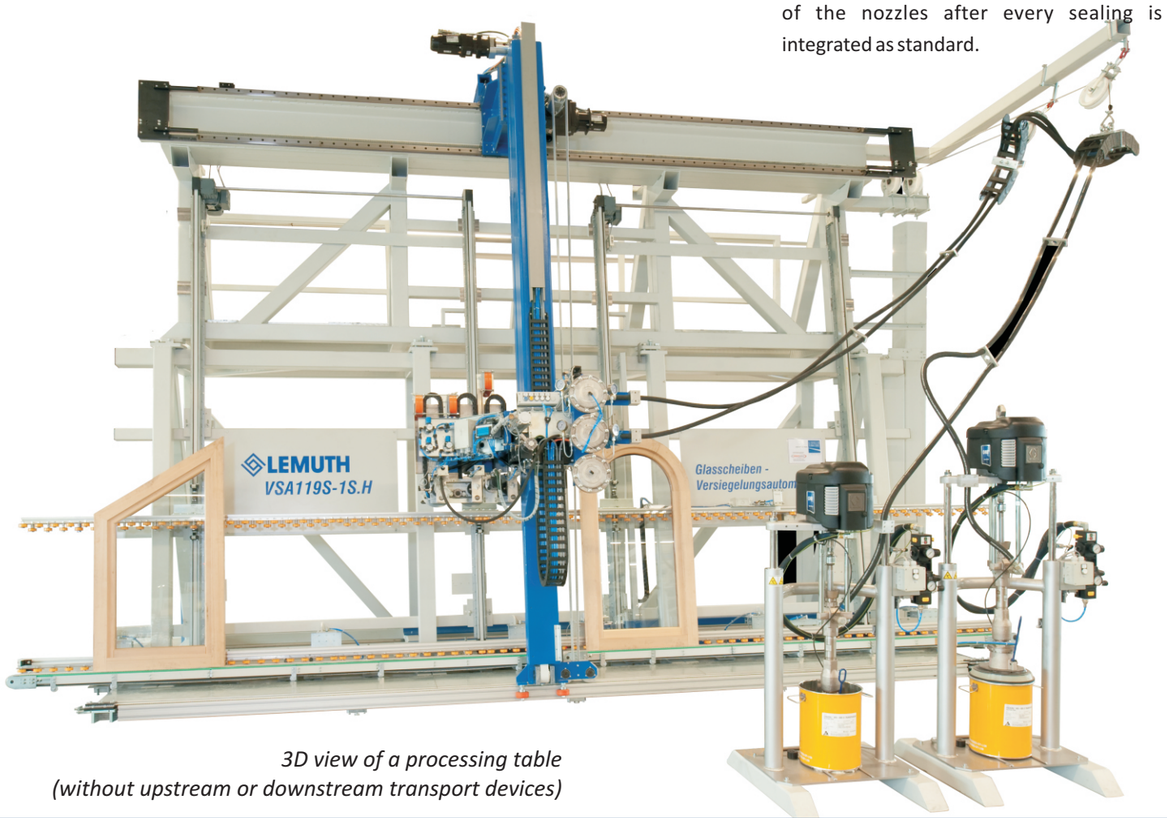


*3D view of a processing table*
*(without upstream or downstream transport devices)*

The floating application head is very well suited to compensating for changes in the profile. By means of an integrated turning gear, the application head is turned at the corners during the silicone application, and thus it can then process the next edge of the window.

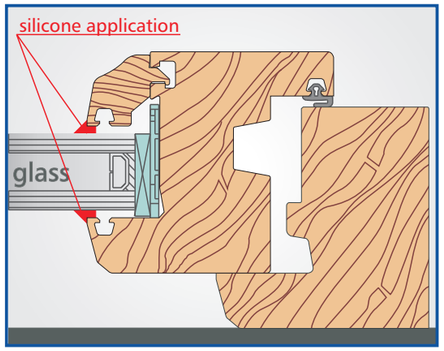


Up to six different colours can be processed. The exchange between the single silicone colours takes place automatically in a one-window cycle. The different silicone colours are permanently and simultaneously fed through the injection head via several hose lines.
A servo-controled gear pump with a fully-automatic pressure control supplies the required amount of silicone with the adjustment of the inlet and outlet pressure of the geared pump. The silicone application device control is carried out via the sealing machine's unit control.

For a perfect result, the silicone application is always one-sided. This means that the floating silicone unit adapts perfectly to the unevenness. Different profile widths, glazing bead widths, glazing bead geometries and tolerances between the two sides (front and back) are easily possible.

When it is sealed on both sides, a turning device is mounted. The element is tilted to the opposite side.

### Choice of suitable configuration level

Different configuration levels are available, depending on the manufacturing requirements and the space constraints of the window manufacturer. Thus, there is a choice of single-side or two-side sealing in one- or two-minute cycles.

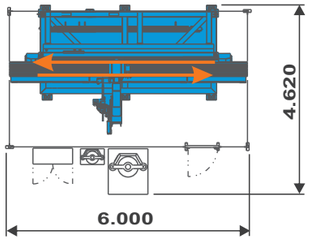


**Single-side sealing in the 1 minute cycle**
**VSA119S-1S-highspeed**
Separately powered conveyor belts on the rear panel and a support conveyor belt allow for careful unit transport. The unit is automatically clamped against the rear panel of the machine at the processing table. Following that, the first sash is sealed. For this, the application head slides along the glass pane and deposits the sealant. The turning gear turns the application head at the corner by 90° and the application onto the second edge can begin. After the application onto all sides, the unit is automatically transported away via the driven belts. The units can be outfed in either direction.

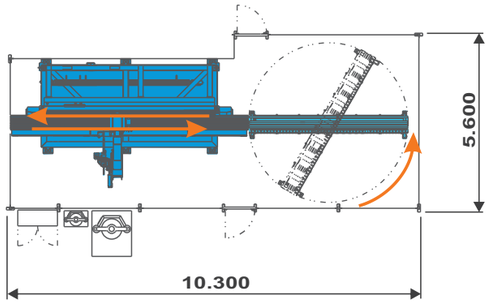


**Two-side sealing in the 2 minute cycle**
**VSA119S-2S-speed**
LEMUTH offers a 1 minute and a 2 minute cycle for the two-side sealing configuration level options. In the 2 minute cycle, the on-loading and the first side sealing takes place via conveyor belts and the LEMUTH application head, as previously described. Afterwards, the unit is transported onto a subordinated tilting turntable, turned 180 degrees and then tilted onto the opposite side. After the unit is turned over, it is returned to the processing table where the silicone application starts. After the two-side sealing, the units can be carried outfed in either direction.