Technical Details

Adhesive metering and applying systems of the *DynaFlow* series can be attached to automatic glass pane gluing machines and automatic sealing machines.

Example of an adhesive metering and applying system attached to an automatic vertical glass pane gluing machine of series ***GVAS115:***

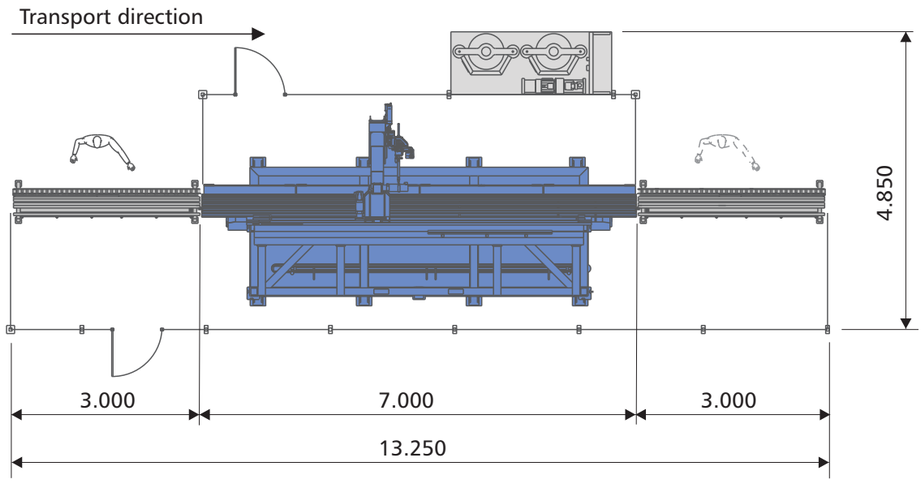

The all-round service from LEMUTH - guarantees security for your investment.

You will receive the following services from a single source and harmonised down to the last detail:

- Project management
- System planning
- Factory planning
- Construction
- Electrical project managment
- Component production
- Installation
- Start-up
- Staff training
- Documentation
- Project management

And included in the software field:

- PLC programming of the system control
- Programming of the industrial PC interfaces
- Network connection to the company network
- Networking the window construction system

LEMUTH GmbH • D-98617 Meiningen • Gleimershäuser Strasse 14
Fon +49 (0) 3693 9412-0 • Fax +49 (0) 3693 9412-50 • E-Mail: info@LEMUTH.com

www.LEMUTH.com

998_304 Prospekt Dyna Flow_englisch_2014 - Technische Änderungen vorbehalten

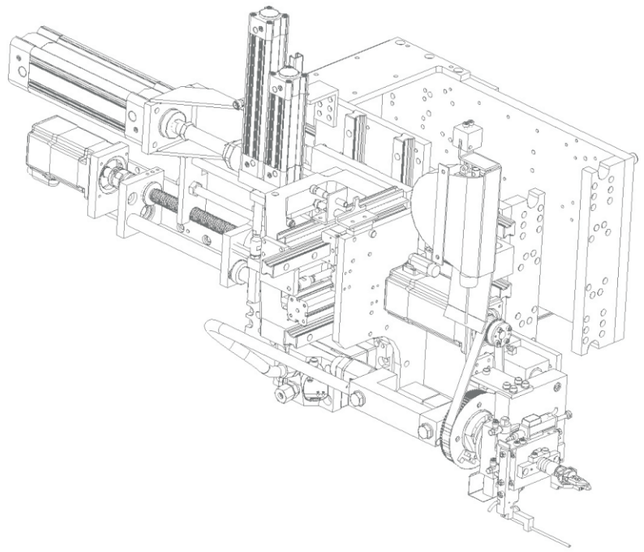

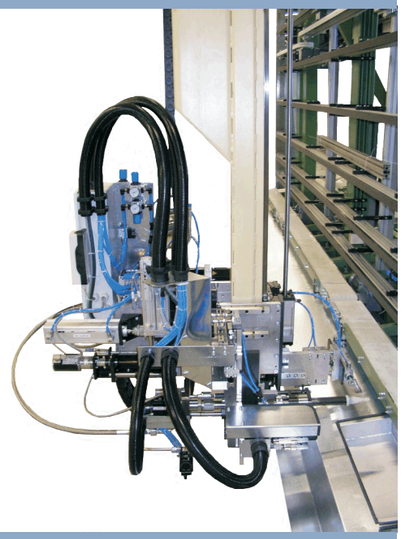

Dyna Flow

Adhesive metering and applying system

Dyna Flow

Adhesive metering and applying system

This highly dynamic machine system has been designed for metering and applying one- and two-component adhesive types for the automatic adhesive application to window and door units. The adhesive can be deposited in the glazing rebate or in the casement overlap. All control and automatic regulation functions of this application system are carried out directly by the control system of the automatic gluing machine.

The application system consists of the following main elements and functions:

1. The adhesive components are metered by commercial gear pumps that are driven by servo motors.
2. The control of the servo motors for the dynamic regulation of the amount of adhesive is carried out directly by the control system of the automatic gluing machine. Thus it is possible to exactly meter the required amounts of adhesive and the mixing ratio even in the start and stop ramps of the travelling motion of the automatic machine.
3. The I/O pressure of the gear pump is always kept at the same level by means of pressure measuring sensors installed at the input and output of the gear pump and an upstream automatic regulation of the input pressure of the gear pump.
4. The adhesive injection nozzle is floating, and when taking the inner corner it is rotated by a servo motor exactly at the travelling speed.
5. When two-component adhesives are applied an additional parallel metering valve, which is located upstream of the static mixer, is used to flush the mixer with the A component.
6. The measuring devices installed in parallel with the adhesive injection nozzle check the glass thickness and the correct position of the glass pane in the window unit.
7. The static mixer which is located in a protecting metal tube can be easily and fast changed by means of a quick-disconnect coupling.
8. Rotating brushing devices clean the nozzle of the static mixer after every gluing cycle.